Datasheet - MS-AZM 200ST-T-1P2PW-2568

Solenoid interlock / AZM 200

(Minor differences between the printed image and the original product may exist!)

- Thermoplastic enclosure
- Guard locking monitored
- Electronic contact-free, coded system
- Connector M23 12-pole,
- Idle assignable pushbutton and LED
- Max. length of the sensor chain 200 m
- Self-monitoring series-wiring of 31 sensors
- 3 LEDs to show operating conditions
- Sensor technology permits an offset between actuator and interlock of ± 5 mm vertically and ± 3 mm horizontally
- Intelligent diagnosis
- Manual release

Ordering details

Product type description	MS-AZM 200ST-T-1P2PW-2568
Article number	103004836
EAN code	
eCl@ss	27-27-26-03

Approval

Approval	TÜV USA/CAN

Classification

Interlocking function:	
Standards	EN ISO 13849-1, IEC 61508, IEC 60947-5-3
PL	bis e
Control category	bis 4
PFH	4.0 x 10^{-9}/h
PFD value	1.0 x 10^{-4}
SIL	bis 3
Mission time	20 Years
Classification	PDF-M
Guard locking function:	

Standards	EN ISO 13849-1, IEC 61508, IEC 60947-5-3
PL	up d
Control category	up 2
PFH value	2.5 x 10^{-9}/h
PFD value	2.2 x 10^{-4}
SIL	up 2
Mission time	20 Years

Global Properties

Product name	AZM 200
Standards	EN 60947-5-1, IEC 61508, EN ISO 13849-1, EN ISO 13849-1
Compliance with the Directives (Y/N) CE	Yes
Suitable for safety functions (Y/N)	Yes
Protection rating	II
Series-wiring	up to 31 components
Length of the sensor chain	max. 200 m
Active principle	inductive
Duty cycle	100 %
Materials	
- Material of the housings	Plastic, glass-fibre reinforced thermoplastic
Housing coating	None
Weight	610 g
Guard locking monitored (Y/N)	Yes
Actuator monitored (Y/N)	No
Idle assignable pushbutton and LED (Y/N)	Yes
Reaction time	≤ 60 ms
Duration of risk	> 120 ms
Time to readiness	4000 ms
Recommended actuator	AZ/AZM 200-B1

Mechanical data

Design of electrical connection	Connector M23, 12-pole
Mechanical life	≥ 1.000.000 operations
restistance to shock	30 g / 11 ms
Resistance to vibration	10 ... 55 Hz, Amplitude 1 mm
Emergency unlocking device (Y/N)	No
Manual release (Y/N)	Yes
Emergency release (Y/N)	No
Latching force	30 N
Clamping force F	2000 N
Max. Actuating speed	≤ 0,2 m/s

Ambient conditions

Ambient temperature	
- Min. environmental temperature	−25 °C
- Max. environmental temperature	+50 °C
Storage and transport temperature	
- Min. Storage and transport temperature	−25 °C
- Max. Storage and transport temperature	+85 °C
Relative humidity	30% ... 95%
- non-condensing	

Protection class	IP67 to IEC/EN 60529
Air clearances and creepage distances To IEC/EN 60664-1	
- Rated impulse withstand voltage U_{imp}	0,8 kV
- Overvoltage category	III
- Degree of pollution	3

Electrical data

Number of auxiliary contacts	0 piece
Number of safety contacts	2 piece
Cross circuit/short circuit recognition possible (Y/N)	Yes
Power to unlock	Yes
Power to lock	No
Supply voltage U_B	
- Min. supply voltage	20.4 VDC
- Max. supply voltage	26.4 VDC
Switch frequency	1 Hz
Rated insulation voltage U_i	32 VDC
Operating current I_e	1.2 A
Utilisation category	DC-12, DC-13
No-load current I_0	0,6 A
Device insulation	≤ 4 A

Electrical data - Safety inputs

Safety inputs	X1 and X2
Rated operating voltage U_e	- 3 V ... 5 V (Low) 15 V ... 30 V (High)
Operating current I_e	> 2 mA / 24 V

Electrical data - Safety outputs

Safety outputs	Y1 and Y2
Fuse rating	short-circuit proof, p-type
Rated operating voltage	0 V ... 4 V under Supply voltage U_B
Residual current I_r	≤ 0,5 mA
Operating current I_e	0,25 A
Utilisation category	DC-12, DC-13

Electrical data - Diagnostic output

Serial diagnostics (Y/N)	No
Fuse rating	p-type, short-circuit proof
Operating current I_e	0,05 A
Utilisation category	DC-12, DC-13
Wiring capacitance for serial diagnostics	-
diagnostic signals	guard door closed and interlocking device locked
Operating principle of the diagnostic output	The short-circuit proof diagnostic output OUT can be used for central visualisation or control tasks, e.g. in a PLC.
notice	The diagnostic output is not a safety-relevant output!

Electrical data - Solenoid control IN

Rated operating voltage U_e	- 3 V ... 5 V (Low) 15 V ... 30 V (High)

Operating current I_e	typically 10 mA / 24 V, dynamically 20 mA

LED switching conditions display

LED switching conditions display (Y/N)	Yes
LED switching conditions display	
- Supply voltage U_B	green LED
- switching condition	yellow LED
- Error functional defect	red LED

ATEX

Explosion protection categories for gases	None
Explosion protected category for dusts	None

Dimensions

Dimensions of the sensor	
- Width of sensor	40 mm
- Height of sensor	220 mm
- Length of sensor	50 mm

Pin assignment

1	A1 Supply voltage U_B
2	X1 Safety input 1
3	A2 GND
4	Y1 Safety output 1
5	OUT Diagnostic output
6	X2 Safety input 2
7	Y2 Safety output 2
8	IN Solenoid control
9	white LED
10	Key button
11	Key button
12	Not used

notice

As lons as the actuating unit remains inserted in the solenoid interlock, the unlocked safety guard can be relocked. The safety outputs then will be enabled again; opening the safety guard therefore is not required.

Included in delivery

Included in delivery	AZM 200 Triangular key

Actuators must be ordered separately.

Indication legend

see drawing: Wiring example

With the represented power-to-unlock principle, the solenoid is energised to enable the opening.
With the alternative power-to-lock principle (not represented), the solenoid must be energised to keep the device in closed condition.

Diagram

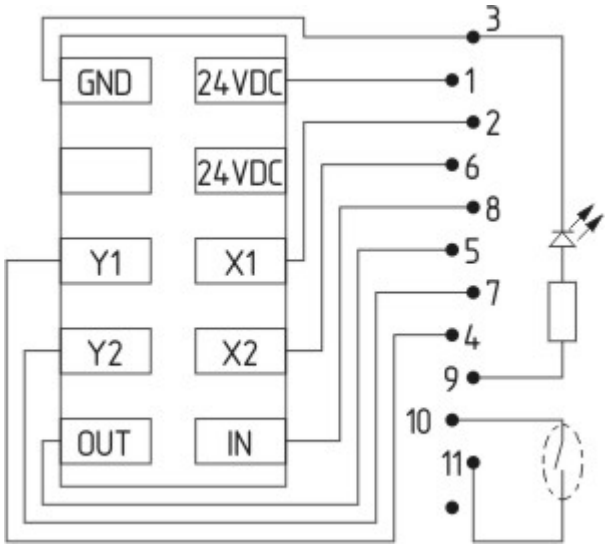

Note Diagram

positive break NC contact

active

no active

Normally-open contact

Normally-closed contact

Ordering code

AZM 200(1)(2)-T-(3)(4)

(1)	
without	Guard locking monitored
B	Actuator monitored
(2)	
SK	Screw connection
CC	Spring pulley connection
ST1	connector M23 x 1, (8+1-pole)
ST2	connector M12 x 1, 8-pole
(3)	
1P2P	1 Diagnostic output and 2 Safety outputs, p-type
1P2PW	gleich - 1P2P, combined diagnostic signal: guard door closed and interlocking device locked
SD2P	serial diagnostic output and 2 Safety outputs, p-type
(4)	
without	Power to unlock
A	Power to lock

Documents

Operating instructions and Declaration of conformity (pl) 451 kB, 16.06.2016

Code: mrl_azm200t_pl

Operating instructions and Declaration of conformity (jp) 532 kB, 17.07.2015

Code: mrl_azm200t_jp

Operating instructions and Declaration of conformity (es) 427 kB, 16.06.2016
Code: mrl_azm200t_es

Operating instructions and Declaration of conformity (cn) 458 kB, 25.06.2015
Code: mrl_azm200t_cn

Operating instructions and Declaration of conformity (en) 349 kB, 18.04.2016
Code: mrl_azm200t_en

Operating instructions and Declaration of conformity (pt) 346 kB, 26.06.2012
Code: mrl_azm200t_pt

Operating instructions and Declaration of conformity (fr) 433 kB, 16.06.2016
Code: mrl_azm200t_fr

Operating instructions and Declaration of conformity (it) 428 kB, 16.06.2016
Code: mrl_azm200t_it

Operating instructions and Declaration of conformity (de) 336 kB, 18.04.2016
Code: mrl_azm200t_de

Operating instructions and Declaration of conformity (nl) 341 kB, 24.03.2015
Code: mrl_azm200t_nl

Operating instructions and Declaration of conformity (da) 312 kB, 22.08.2013
Code: mrl_azm200t_da

Operating instructions and Declaration of conformity (sv) 343 kB, 07.08.2015
Code: mrl_azm200t_sv

Wiring example (de, en) 150 kB, 06.06.2011
Code: mrl_az-azm200st_de-en

Wiring example (99) 21 kB, 12.01.2009
Code: kazm2l26

Diagnosis tables (en) 136 kB, 12.01.2009
Code: b_tabp02

Diagnosis tables (de) 135 kB, 12.01.2009
Code: b_tabp01

Brochure (de) 5 MB, 11.08.2015
Code: b_css_brosch_de

Brochure (en) 13 MB, 11.08.2015
Code: b_css_brosch_en

TÜV certification (de, en) 599 kB, 25.03.2015
Code: z_azmp04

EAC certification (ru) 809 kB, 05.10.2015
Code: q_6040p17_ru

notice (en, de) 803 kB, 18.06.2015
Code: mrl_az-azm200-d_sk_de-en

Images

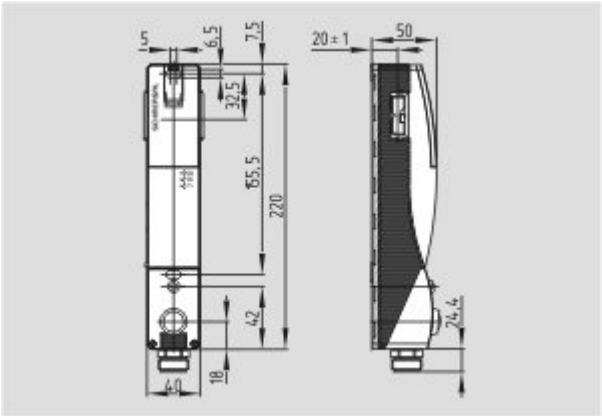

Dimensional drawing (miscellaneous)

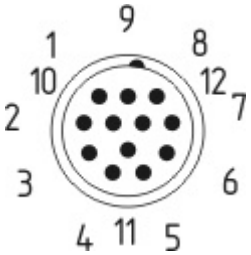

Contact arrangement

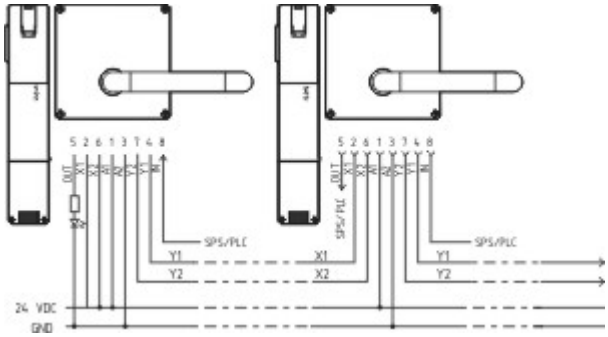

Wiring example

System components

Actuator

101183465 - AZ/AZM 200-B1-LT

- Actuators with return spring
- Actuator for sliding guards
- Tolerates up to max. 5 mm overtravel

101183466 - AZ/AZM 200-B1-LTP0

- Actuators with return spring
- Actuator for sliding guards
- Tolerates up to max. 5 mm overtravel

101183469 - AZ/AZM 200-B1-RT

• Actuators with return spring
• Actuator for sliding guards
• Tolerates up to max. 5 mm overtravel

101183470 - AZ/AZM 200-B1-RTP0

• Actuators with return spring
• Actuator for sliding guards
• Tolerates up to max. 5 mm overtravel

101178681 - AZ/AZM 200-B30-LTAG1

• Actuator for hinged guards
• With door detection sensor T
• Easy and intuitive operation
• No risk of injury from protruding actuator
• No supplementary door handles required
• Does not protrude into the door opening
• Various handles available

101178668 - AZ/AZM 200-B30-LTAG1P1

• One-hand emergency exit,
even in de-energised condition
• Actuator for hinged guards
• Easy and intuitive operation
• With door detection sensor T
• No risk of injury from protruding actuator
• No supplementary door handles required
• Does not protrude into the door opening
• Various handles available

101186150 - AZ/AZM 200-B30-LTAG1P20

• One-hand emergency exit,
even in de-energised condition
• Actuator for hinged guards
• Easy and intuitive operation
• With door detection sensor T
• No risk of injury from protruding actuator
• No supplementary door handles required
• Does not protrude into the door opening
• Various handles available

101192102 - AZ/AZM 200-B30-LTAG1P25

• One-hand emergency exit,
even in de-energised condition
• Actuator for hinged guards
• Easy and intuitive operation
• With door detection sensor T
• No risk of injury from protruding actuator
• No supplementary door handles required
• Does not protrude into the door opening
• Various handles available

101181137 - AZ/AZM 200-B30-LTAG2

• Actuator for hinged guards
• With door detection sensor T
• Easy and intuitive operation
• No risk of injury from protruding actuator
• No supplementary door handles required
• Does not protrude into the door opening
• Various handles available

101181141 - AZ/AZM 200-B30-LTAG2P1

• One-hand emergency exit,
even in de-energised condition
• Actuator for hinged guards
• With door detection sensor T
• Easy and intuitive operation
• No risk of injury from protruding actuator
• No supplementary door handles required
• Does not protrude into the door opening
• Various handles available

101189020 - AZ/AZM 200-B30-LTAG2P20

• One-hand emergency exit,
even in de-energised condition
• Actuator for hinged guards
• Easy and intuitive operation
• With door detection sensor T
• No risk of injury from protruding actuator
• No supplementary door handles required
• Does not protrude into the door opening
• Various handles available

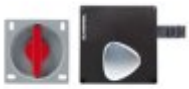

101192106 - AZ/AZM 200-B30-LTAG2P25

• One-hand emergency exit,
even in de-energised condition
• Actuator for hinged guards
• Easy and intuitive operation
• With door detection sensor T
• No risk of injury from protruding actuator
• No supplementary door handles required
• Does not protrude into the door opening
• Various handles available

101178680 - AZ/AZM 200-B30-RTAG1

• Actuator for hinged guards
• With door detection sensor T
• Easy and intuitive operation
• No risk of injury from protruding actuator
• No supplementary door handles required
• Does not protrude into the door opening
• Various handles available

101178738 - AZ/AZM 200-B30-RTAG1P1

• One-hand emergency exit,
even in de-energised condition
• Actuator for hinged guards
• Easy and intuitive operation
• With door detection sensor T
• No risk of injury from protruding actuator
• No supplementary door handles required
• Does not protrude into the door opening
• Various handles available

101186144 - AZ/AZM 200-B30-RTAG1P20

• One-hand emergency exit,
even in de-energised condition
• Actuator for hinged guards
• Easy and intuitive operation
• With door detection sensor T
• No risk of injury from protruding actuator
• No supplementary door handles required
• Does not protrude into the door opening
• Various handles available

101192103 - AZ/AZM 200-B30-RTAG1P25

• One-hand emergency exit,
even in de-energised condition
• Actuator for hinged guards
• Easy and intuitive operation
• With door detection sensor T
• No risk of injury from protruding actuator
• No supplementary door handles required
• Does not protrude into the door opening
• Various handles available

101181139 - AZ/AZM 200-B30-RTAG2

• Actuator for hinged guards
• With door detection sensor T
• Easy and intuitive operation
• No risk of injury from protruding actuator
• No supplementary door handles required
• Does not protrude into the door opening
• Various handles available

101181143 - AZ/AZM 200-B30-RTAG2P1

• One-hand emergency exit,
even in de-energised condition
• Actuator for hinged guards
• Easy and intuitive operation
• With door detection sensor T
• No risk of injury from protruding actuator
• No supplementary door handles required
• Does not protrude into the door opening
• Various handles available

101191659 - AZ/AZM 200-B30-RTAG2P20

• One-hand emergency exit,
even in de-energised condition
• Actuator for hinged guards
• Easy and intuitive operation
• With door detection sensor T
• No risk of injury from protruding actuator
• No supplementary door handles required
• Does not protrude into the door opening
• Various handles available

101192104 - AZ/AZM 200-B30-RTAG2P25

• One-hand emergency exit,
even in de-energised condition
• Actuator for hinged guards
• Easy and intuitive operation
• With door detection sensor T
• No risk of injury from protruding actuator

- No supplementary door handles required
- Does not protrude into the door opening
- Various handles available

Connector

A-K12M23

- Pre-wired cable
- 12-pole