3615KL (92□x 38L)

NMB

NMBTC.COM / 248.919.2250

DC Axial Fans

General Specifications

Motor Protection:
Auto Restart/Polarity Protection

Insulation Resistance: 10M Ω or over with a DC500V Megger

Dielectric Withstand Voltage: AC 700V 1s

Allowable Ambient Temperature Range:

B50 Class:	-10°C ~ +60°C (Operating)
B30~B40 Class:	-10°C ~ +70°C (Operating)
All Class:	-40°C ~ +70°C (Storage)

(non-condensing environment)

Expected Life

Failure Rate: 10%
25°C 100,000 Hours (P00)

Characteristic Curves

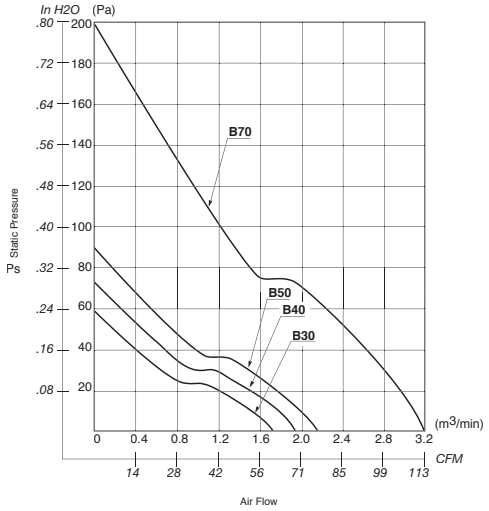

Outline

Units: inch / (mm)

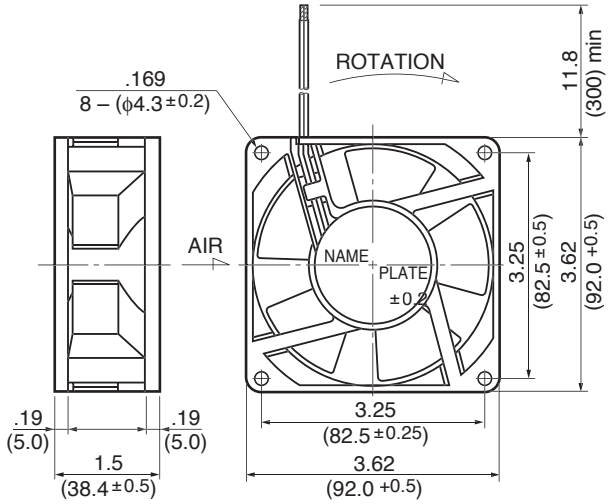

Panel Cut-outs

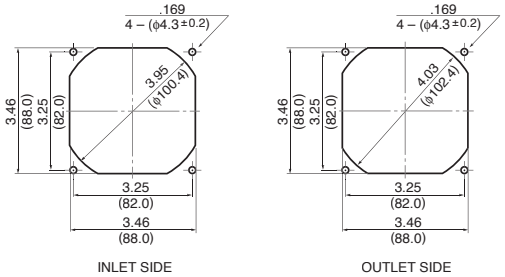

Material

Casing	: Plastic (Black) 94V-0
Impeller	: Plastic (Black) 94V-0
Bearing	: Ball Bearing
Lead Wire	: UL1007, AWG24, +Red, -Black

Specifications

MODEL	Product No.	Rated Voltage (V)	Operating Voltage (V)	Current (A)*1	Input Power (W)*1	Speed (min-1)*1	Max. Air Flow CFM*1	Max. Air Flow (m3/min)*1	Max. Static Pressure in H2O	Max. Static Pressure (Pa)*1	Noise (dB)*1	Mass (g)
3615KL-04W-**B30**-	P00	12	7.0 ~ 13.2	0.25	3.00	3200	60.3	1.71	.23	57.9	40.5	210
3615KL-04W-**B40**-	P00	12	7.0 ~ 13.2	0.34	4.08	3600	68.5	1.94	.29	72.0	44.0	210
3615KL-04W-**B50**-	P00	12	7.0 ~ 12.6	0.46	5.52	4000	76.2	2.16	.36	89.2	46.5	210
3615KL-05W-**B30**-	P00	24	12.0 ~ 26.4	0.15	3.60	3200	60.3	1.71	.23	57.9	40.5	210
3615KL-05W-**B40**-	P00	24	12.0 ~ 26.4	0.20	4.80	3600	68.5	1.94	.29	72.0	44.0	210
3615KL-05W-**B50**-	P00	24	12.0 ~ 25.2	0.24	5.76	4000	76.2	2.16	.36	89.2	46.5	210
3615KL-07W-**B70**-	P00	48	30.0 ~ 50.2	0.36	17.3	5800	110.0	3.10	.71	178.0	55.0	210

Rotation: Clockwise Airflow Outlet: Air Out Over Struts *1: Average Values in Free Air