LEONI

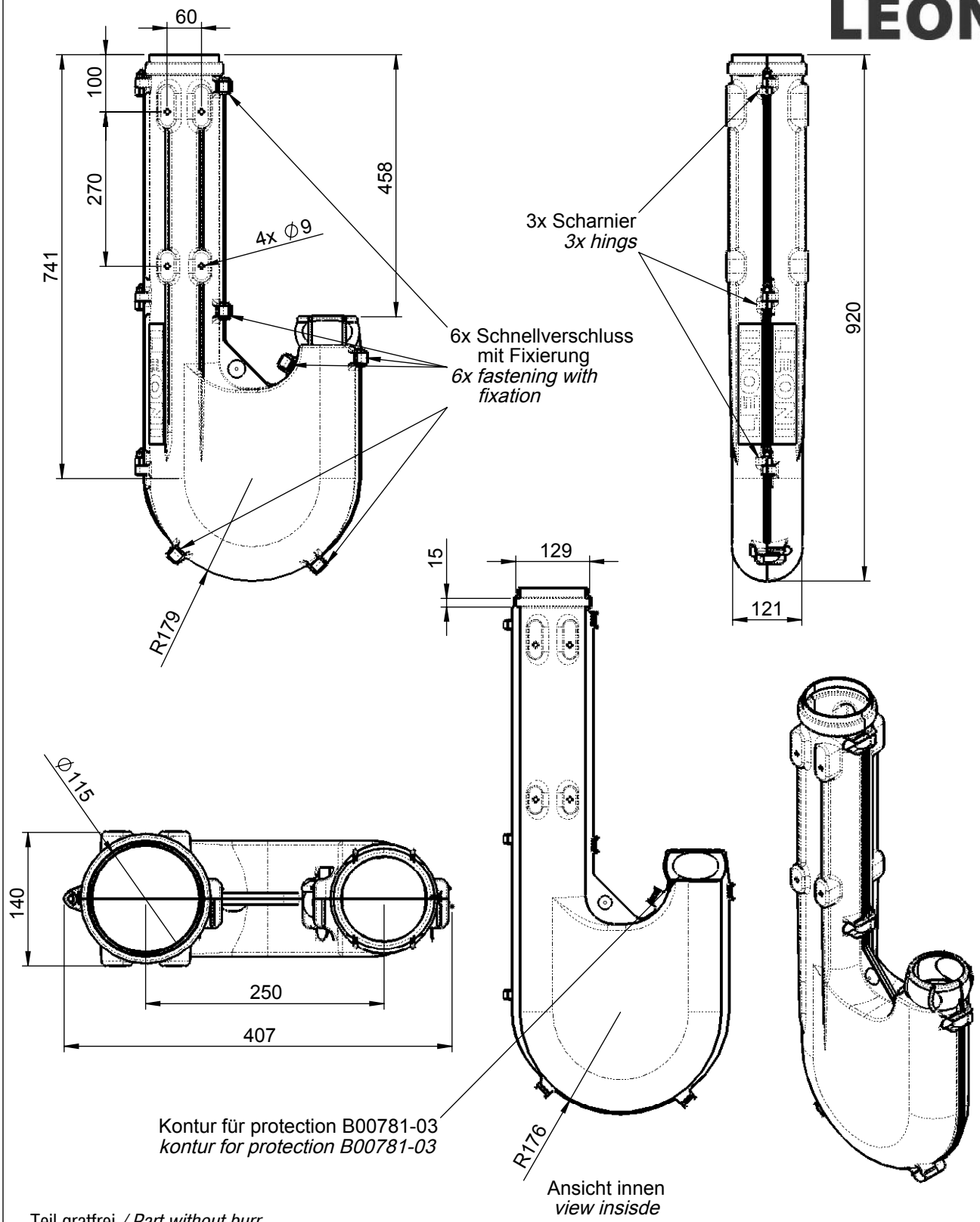

Teil gratfrei / *Part without burr*

Teil frei von lackbenetzungshemmenden Stoffen / *Part free of silikone substances*

This drawing is not allowed to be duplicated or notified to a third person or a competition company neither in original nor as copy without our written permission (§§15-17 UrhG)
In case of contravention we keep the right of claiming for damages (§97 UrhG) and the right of demanding for a penalty (§§106, 108a UrhG)

				general tolerance: DIN 7168-m			scale 1:10, 1:6
							material PP
				2008	date	name	description
				worked	16.09.	We	LEONI LSH II
				checked	16.09.	Kü	*LEONI LSH II*
				standard			
1	aktualisiert	16.01.09	We	LEONI Protec Cable Systems Schmalkalden			plan number B01900-12
No.	differently	date	name				sheet 1 / 1 sh.