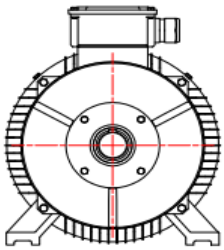

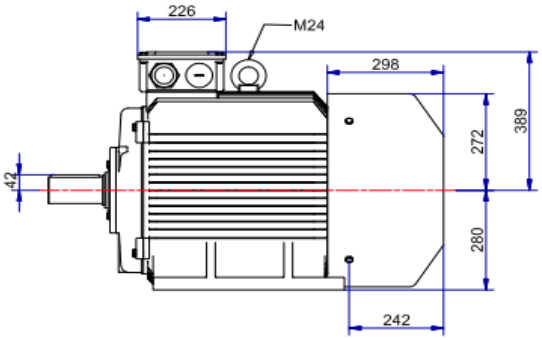

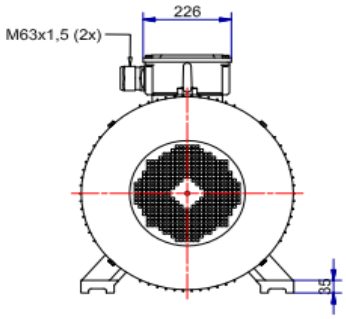

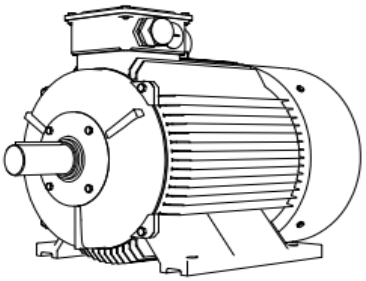

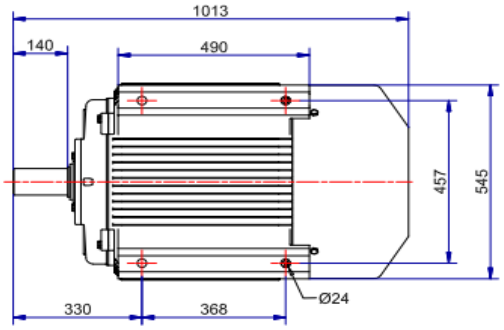

Shaft detail

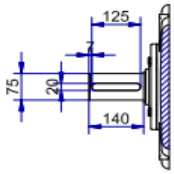

Specification	IEC 60034-1			
Manufacturer	DM Motors Denmark A/S			
Motor type	DM1-IE3 280 S4			
Rated power	75,00	kW	S1	duty
Speed	1491	r.p.m		
Voltage	400	/	690	V
Frequency	50	Hz		
Connection	Δ	/	Y	
Amps full load	134,0	/	77,4	A
Amps no-load(400V)		A		
Enclosure	IP 55			
Insulation Class	F (temp. rise B (80 K))			
Max. coolant temp.	40°C			
Max. altitude	1.000	mtr, above sea level		
Comment	3 x PTC 150°C			
Cable entries	2 x M63x1,5 + 1 x M20x1,5 (ptc)			
Feature	Cast-iron motor			
Weight	610	kg		
Catalog no.	11134A75D			
Warranty	12~18 months			

Efficiency class		IE3		
Load data	100%	75%	50%	
Efficiency	95,0	95,1	92,2	%
Power factor	0,85	0,80	0,72	
Sound pressure level (1m)		76,0		dB(A)
Resistance R20 (open)		0,067		Ω
Resistance R20	Δ	0,045		Ω
Full load torque		480		Nm
DOL Starting torque vs FL torque		2,45		
DOL Pull up torque vs FL torque		1,73		
DOL Pull out torque vs FL torque		3,36		
Star-Delta Starting torque vs FL torque		0,76		
Star-Delta Pull up torque vs FL torque		0,54		
Star-Delta Pull out torque vs FL torque		1,05		
DOL Starting current vs FL current		6,84		
Star Delta Starting current vs FL current		2,14		
Rotor Inertia		1,0450		kgm2
Bearing DE		6317 - C3		
Bearing NDE		6317 - C3		