Data Sheet

HOYER MOTORS

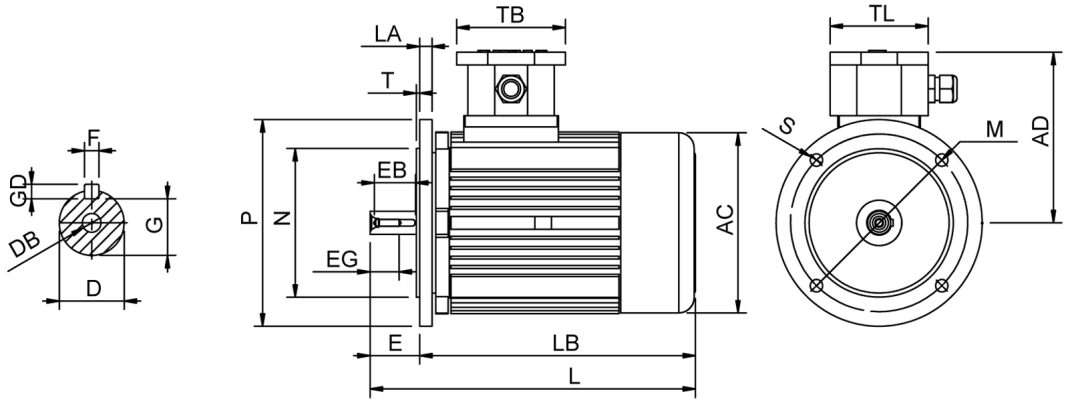

AC = 194	EG = 22	LA = 15	S = 4 - Ø15
AD = 184	F = 8	LB = 313	T = 4
D = 28j6	G = 24	M = 215	TB = 119
DB = M10	GD = 7	N = 180	TL = 132
E = 60	L = 373	P = 250	
EB = 50			

Type	**5AT 100LA-4**	Rotor inertia (kgm²)	0,0056
Mounting	B5	Noise level (dB(A))	55
Protection class	IP55	Vibration class	Grade-A
Insulations class	F	No load current (A)	2,50
Temperature rise	B	Winding resistance (ohm)	3,10
Standard	IEC 60034-1	Starting time (sec.)	10,00
Test standard	IEC 60034-2-1	Temperature rise winding	0
Alitude above s.l. max.(m)	1000	Temperature rise surface	0
Cooling method	IC411/TEFC	Tbox position	Top
Poles	4	Cable entry main	1xM20x1,5 Ø8-13mm
Painting	Ral 9005		
DE. Bearing	6206-ZZ/C3	Cable entry accessory	
NDE. Bearing	6206-ZZ/C3	Terminal board thread	
Bearing fixed in	D-end	Thermal protection	PTC 3x130C
Weight (kg)	26,7	Space heater	2 X 25W / 230V
		Starting method	

Rated power (kW)	2,20	2,20	2,50
Frequency (Hz)	50	50	60
Voltage (V)	230 400	380	440
Connection	D Y	Y	Y
Full load current (A)	8,50 4,90	5,19	5,03
Speed (rpm)	1410	1410	1690
Power factor cos(phi)	0,80	0,81	0,82
Efficiency, 100/75/50 (%)	81,0 79,7 77,7	79,7 78,3 76,1	79,7 78,3 76,1
Efficiency class	IE1	IE1	IE1
Ist/In	5,00	4,75	4,60
Full load torque (Nm)	15,0	15,0	14,1
Tst/Tn	2,20	1,98	1,96
Tmax /Tn	2,30	2,07	2,05
Duty	S1	S1	S1
Ambient temp. (°C)	50	50	50

According to .....:
Special features .... : EX II2G Ex db eb IIC T4 Gb, CESI 13 ATEX 008 X; Suitable for VFD