THIS IS THE PROPERTY OF SPX FLOW TECHNOLOGY KERRY Ltd. © 2013

DRAWING NO.
DIL-0498-78-07

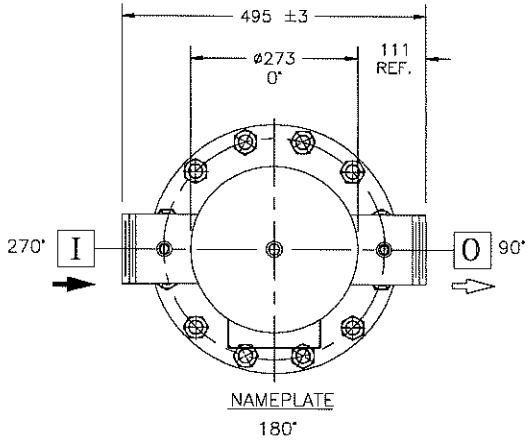

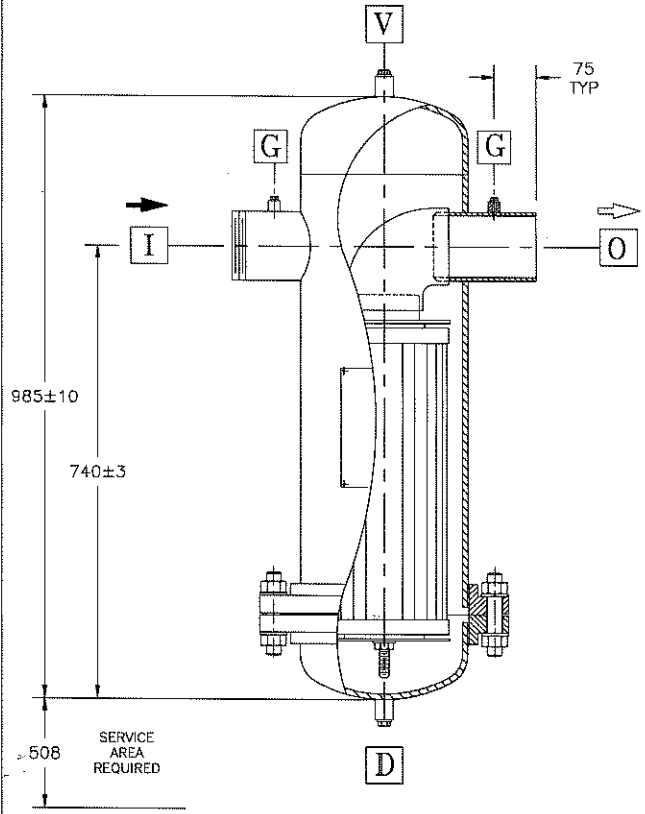

FILTER DATA

ELEMENT CATALOG No.		49-402-K-139
QUANTITY.		1
TOTAL FILTRATION AREA.	m^2	1.30
EFFICIENCY.		98% @ 5μ
ELEMENT MATERIALS		
SUPPORT STRUCTURE.		CARBON STEEL
FILTER MEDIUM.		NOMEX
GASKET		
MATERIAL.		CNAF
PART No.		1204443
PRESSURE DROPS		
CLEAN (MAX.)	bar	–
DIRTY (MAX.)	bar	0.55
COLLAPSE (MIN)	bar	3.45
MAX. OPERATING TEMPERATURE.	°C	232(450°F)
MIN. OPERATING TEMPERATURE.	°C	0

VESSEL DATA

MATERIAL.		CARBON STEEL
DESIGN CODE.		ASME VIII DIV 1, 2010 ADD 2012 CE MARK IN ACC. W/PED 97/CE/23 ACCORDING TO MODULE B+C1
DESIGN PRESSURE.	bar	12.4
DESIGN TEMPERATURE.	°C	232 (450°F)
CORROSION ALLOWANCE.	mm	0
RADIOGRAPHY.		NO
HEAT TREATMENT.		NO
WELDING FACTOR		0.7
FINISH		
INTERNAL.		SEE NOTE
EXTERNAL.		SEE NOTE
WEIGHT (APPROX).	Kg	100

NOZZLE TABLE

REF.	DESCRIPTION	SIZE	RATING	TYPE	REMARKS
I	INLET	4"		NPT	
O	OUTLET	4"		NPT	
D	DRAIN	1/2"	3000 lb	NPT	COUPLING & PLUG
V	VENT	1/2"	3000 lb	NPT	COUPLING & PLUG
G	GAUGE	1/4"	3000 lb	NPT	COUPLING & PLUG
	ACCESS	10"	ANSI 150	RFSO	

NOTES

FINISH :

– SHOT BLASTED 2 ½

INTERNAL :
– PRESERVATIVE OIL COATED

EXTERNAL :
– PRIMER TEMASIL 90 (ZINC SILICATE PAINT) GREY; 60 MICRON
– TOP COAT TEMAL 600 (SILICONE PAINT) RAL 9006; 30 MICON
– DFT OF 90 MICRON

CUSTOMER:
PURCHASE ORDER No.: –
TAG No.:
PROJECT NAME: –
EQUIPMENT DESIGNATION: –
DOLLINGER REFERENCE: –

TITLE:
GP-146-140
SERIES 150
GAS PIPELINE
PARTICULATE FILTER

Dollinger®

- DIMENSIONS IN mm UNLESS OTHERWISE STATED
- ALL FLANGE BOLTHOLES STRADDLE NATURAL VESSEL CENTRELINES.
- SEE TOP VIEW FOR CORRECT ORIENTATION OF ALL NOZZLES AND FITTINGS.

DOC. No.	SIZE	DESCRIPTION
	–	

REFERENCE DOCUMENTS

REV.	ECN	DATE	DRN.	ENG.	CHK.	APP.
4						
3	6887	15.11.13	A.L.	B.Mc.S.	A.L.	D.H.
2	6739	03.05.13	R.R.	P.W.	T.O'S.	D.H.
1	3790	09.12.04	BM	RS	KOK	KOK

DRAWN.:	R.RUMPLER	16.09.04
ENGINEER.:	R.SHEEHAN	13.10.04
CHECKED.:	W.KENNEDY	13.10.04
APPROVED.:	C.JOY	13.10.04

SCALE: NTS

SIZE A4

DRAWING NUMBER DIL-0498-78-07

REV. 3