DWG Nr.	Burner	ø A	ø B	X
C014908/1	EMB-1-SIK-CH4-L (low speed)	-	-	-
C014908/2	EMB-1-SIK-CH4-M (medium speed)	ø30	ø55	306
C014908/3	EMB-1-SIK-CH4-H (high speed)	-	-	-

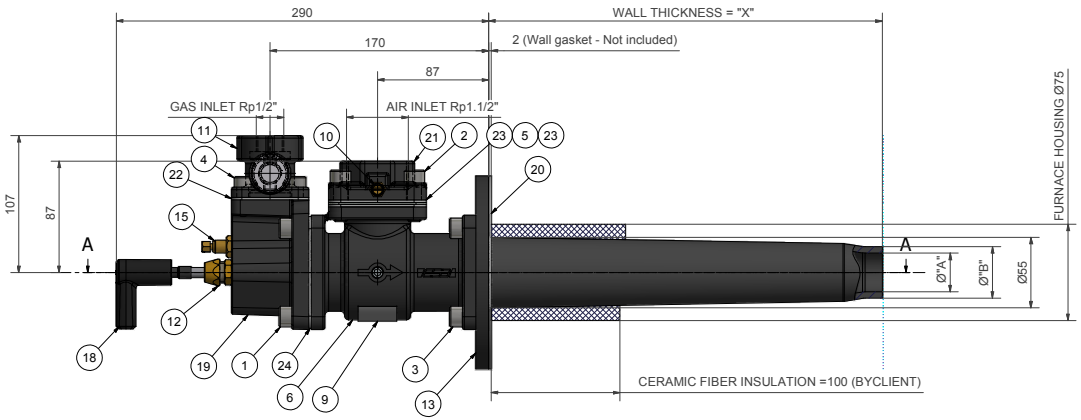

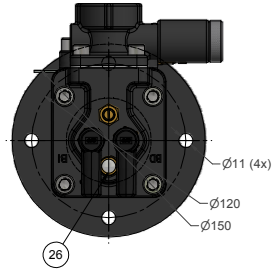

POS.	DESCRIPTION	MODEL	Q.TY	CODE
1	Socket head screw	UNI5931 M10x25	4	35057
2	Socket head screw	UNI5931 M10x30	4	35058
3	Socket head screw	UNI5931 M10x20	4	35056
4	Socket head screw	UNI5931 M8x20	4	35047
5	Orifice	10/12OP-S C012931/2	1	10123
6	Mixer body	C003459	1	10183
7	Grub screw	DIN906 G1/8"	2	10332
8	Gas pipe and combustion head assembly	C014909	1	10760
9	Identification plate	C000711	1	10955
10	Pressure plug	R1/8" C006723/1	1	11487
11	Gas adjuster	4GA8 Rp1/2" C001997/1	1	12372
12	Electrode fixing socket	C002857 R1/4"	2	13518
13	Fixing flange	C002398	1	13585
14	SiC flame tube	BR012 C002179	1	13587
15	Pressure plug	R1/4" C006724/1	1	13804
16	Fixing nut	G1/4"	1	14108
17	Ignition/detection electrode	C002887	2	21446
18	Electrode plug	C-5 C007169	2	23051
19	Gas inlet boby	C014366	1	34081
20	Wall gasket (NOT INCLUDED)	C014590	1	34175
21	Threaded flange	312PF Rp1.1/2" C012706/2	1	73467
22	Gasket	C003218/1	1	73497
23	Gasket	C003218/2	2	73498
24	Gasket	C003218/3	1	73499
25	Fiber gasket	SW607HT Paper OD65 ID55 thk.2	1	75586
26	Peepsight	R3/8" C013555/1	1	76299

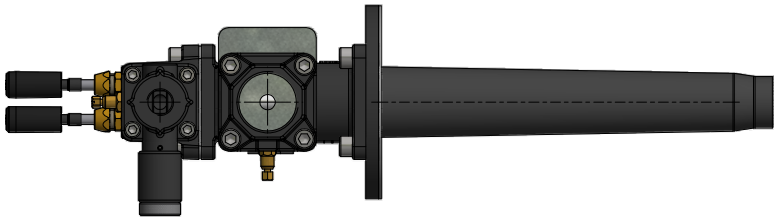

Gas orifice flowmeter 4POP-S Rp1/2" included
For gas line assembly see the flow scheme on relative datasheet

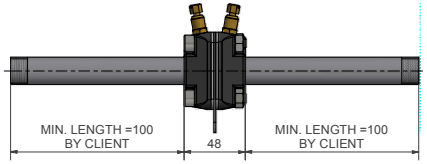

TECHNICAL DEPARTMENT
19.06.17
ISSUED FOR CONSTRUCTION
VALIDO PER ESECUZIONE

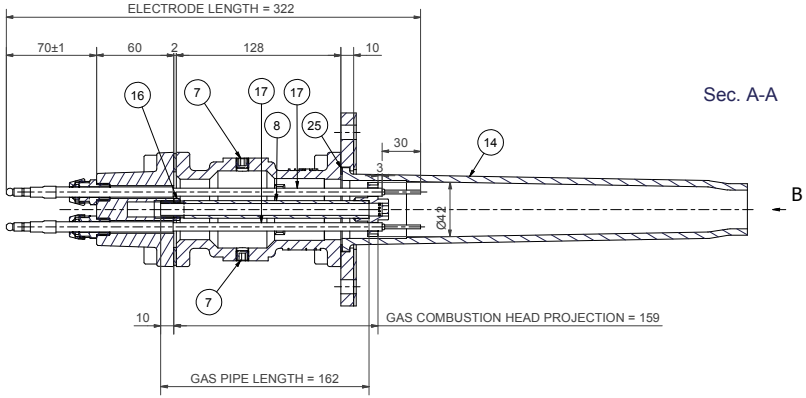

Sec. A-A

B (1 : 2)

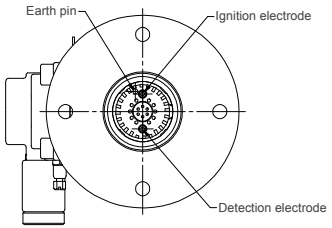

NOTES:
1) MATERIALS : All employed materials have to be belonging in the ZERO class of reaction to the fire (incombustible) according to UNI 9177.
2) DOPES : To seal and lock all threaded gastight and airtight junctions use dope according to EN-751.
3) The orifice flow meter is supplied apart
The CLIENT, in assemblage phase, has to position it maintaining pipeline rectilinear lineas pointed out to sketch.
4) The test pressure point must be positioned on the same side of the burner.

ESA PYRONICS INTERNATIONAL
SIAD Group

Titolo: Assieme bruciatore mod. EMB-1-SIK-GA-CH4-E-M1-E	Drawn: DAG
Title: EMB-1-SIK-GA-CH4-E-_-E burner assembly	App'd: ABA
	Date: 19.06.17
	Scale: 1 : 2
	S.N.: -
Thermal treatment: - / Superficial treatment: - / Obtained from: - / Replaces the: -	Client: -
Material: - / Tolerances: - / Weight: 8 Kg / Size: A1 / Sheet: 1 / 2	Client Ref.: -
DWG Nr.: C014908	Rev.:

THIS DRAWING IS PROPERTY OF ESA S.p.A. AND CAN BE MODIFIED AT ANY TIME WITHOUT PRIOR NOTICE. NO PART OF THIS DOCUMENT MAY BE REPRODUCED OR TRANSMITTED IN ANY FORM OR BY ANY MEANS, ELECTRONIC, MECHANICAL, PHOTOCOPYING, RECORDING, TRACING OR OTHERWISE. THE IMPROPRIATE AND UNAUTHORIZED USE WHICH MAY BE DETRIMENTAL TO THE INTERESTS OF THE COMPANY IS STRICTLY FORBIDDEN. ALL RIGHTS OF DESIGN AND INVENTION RESERVED.

www.esapyronics.com